Code: Z320
Rev A

General Fitting Guide - For WHITELINE swaybars.

Universal swaybar fitting guide for replacement and full kit swaybars, to be used whenever specific fitting instructions are not supplied or as a supplementary fitting instruction sheet.

Sound motor vehicle mechanical knowledge is expected.

.

Stage 1. Swaybar fitment.

- For replacement type swaybars, take note of the fitment, alignment and clearances of OEM swaybar, endlink and any other associated components before removing.
- Apply supplied grease to the contact surfaces of new bushings.
- Place the swaybar in position and connect to the chassis. Parts supplied, procedure to follow and configuration type will vary between individual swaybars.
- In some cases, it may be necessary to raise the vehicle and/or remove road wheels and/or suspension, drive-train or exhaust system components. It is critical that vehicle is safely secured on hoist or on chassis stands.

If suspension components need to be removed, it may be beneficial to measure original wheel alignment settings before continuing

.

- Proper safety procedures must be followed, and care taken. Be extra careful when working with hot components.
- Always use new hardware if supplied.
- Only tighten fittings with the vehicle at ride height.

Stage 2. Swaybar link assembly fitment and adjustment.

- Swaybar endlink assembly, fitment and tensioning is best done with the vehicle at normal ride height to ensure correct alignment, clearance and operation.
- Fit the swaybar link assembly in place. Parts supplied, procedure to follow and configuration type will vary between individual swaybars.
- For replacement type swaybars supplied without links, re-use factory links and hardware.
- For swaybars supplied with new links and hardware, refer to Figures 1 to 4 for bushing type endlink and their correct assembly. Refer page 2 for Ball-style.
- Whiteline Blade adjustable swaybars vary between 2, 3 and 4 holes per side, depending on application. Refer to Fig. 5 to work out the desired setting on how to connect the endlink. If multi-hole endlink brackets are supplied, choose the hole that maintains the endlink close to vertical.

  Caution: WHITELINE recommends starting with softer setting rather than harder.
- Always use new hardware if supplied.
- Tighten all fittings with the vehicle at ride height.

Caution: Do not over tighten swaybar pin type link bushes, refer Fig 1. Nuts should be tightened until washer meets the bush & stops rotating. Then tighten a further $^{2}/_{3}$ of a turn. Over tightening compresses and pre-loads the polyurethane bush which reduces articulation and may cause premature failure.

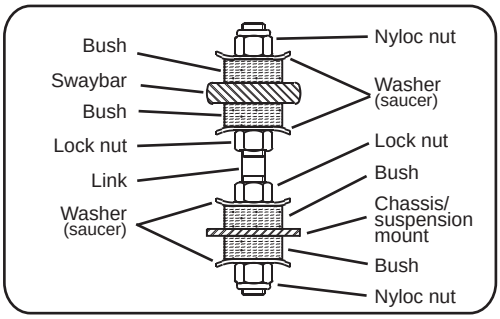

Fig.1. Whiteline double pin type link.

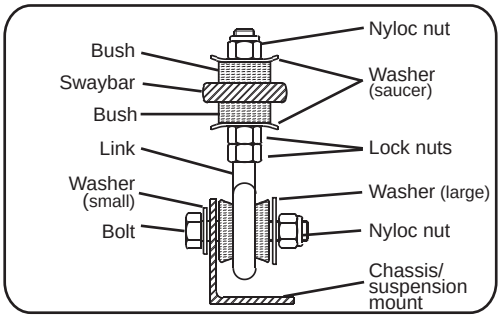

Fig.2. Whiteline pin/eye type link.

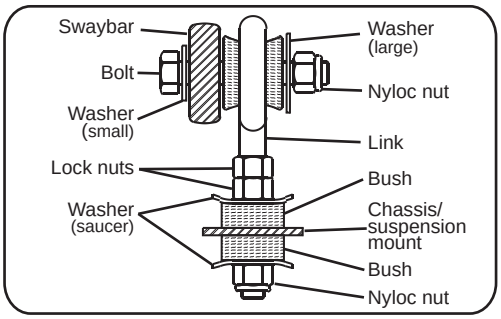

Fig.3 Whiteline eye/pin type link.

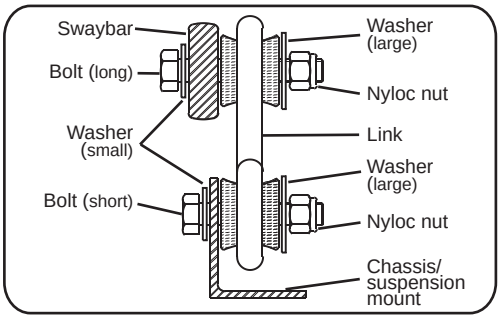

Fig.4 Whiteline double eye type link.

<u>Warning:</u> Please drive carefully while you accustom yourself to the changed vehicle behaviour.

Copyright ABN 99 124 177 297

Code: Z320
Rev A

General Fitting Guide - For WHITELINE swaybars.

Continued - Page 2 or 2

Universal swaybar fitting guide for replacement and full kit swaybars, to be used whenever specific fitting instructions are not supplied or as a supplementary fitting instruction sheet.

Stage 3. Post installation check and maintenance.

- Depending on the application and the removal of suspension components during installation in stages 1 and 2, wheel alignment settings may have been altered. Check wheel alignment settings, and adjust as required.

- Re-tension all fittings after a settling-in period, but not later than 100kms (60miles) after installation.

- For noise and friction free operation, carry out periodic inspections and maintain proper bushing lubrication.

-

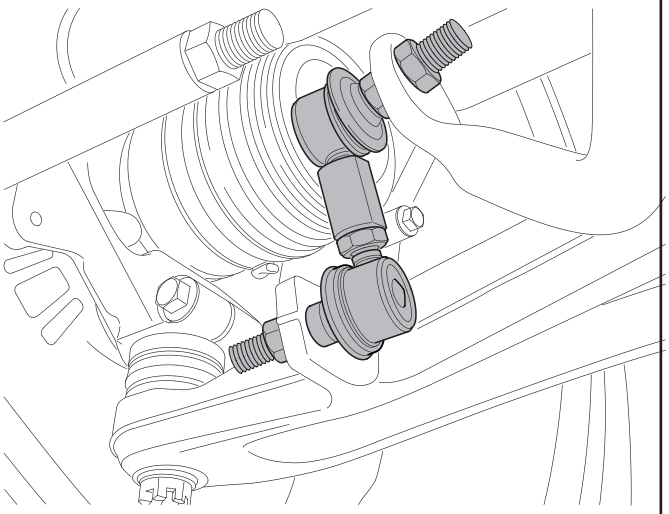

WHITELINE Ball-style links - refer supplementary install guide Z5146 also supplied in kit.

WHITELINE swaybar lateral locks may be supplied (or purchased) - refer supplementary install guide Z5160 also supplied in kit. Refer image below -

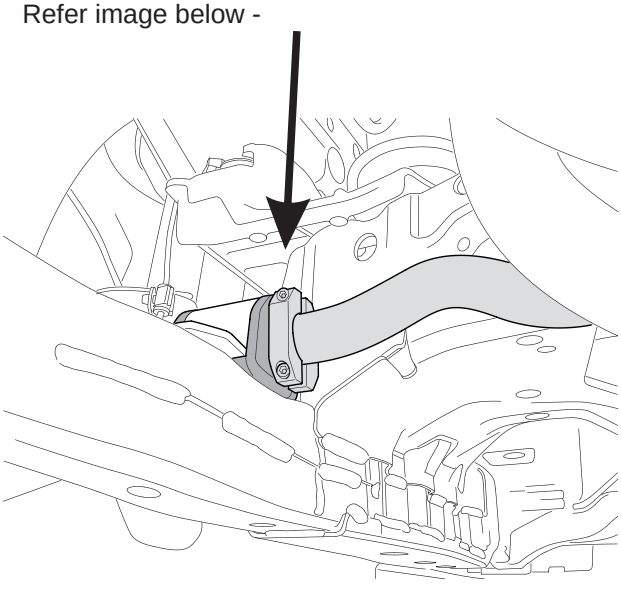

Fig.5 WHITELINE 3 hole Blade swaybar

WHITELINE Blade adjustable swaybar - rate adjustment guide

Warning: Please drive carefully while you accustom yourself to the changed vehicle behaviour.

Copyright ABN 99 124 177 297

Installation Guide
ADJUSTABLE SWAYBAR LINKS

Z5146
Rev. B

(Always refer to the current catalogue for complete application listings)

N.B: This installation guide should be used in conjunction with the workshop manual.

1.Drive the vehicle up on ramps (if available) or alternatively raise the vehicle evenly on both sides and support with jack stands.
2.Loosen and remove the existing OE sway bar links.
3.Use a ruler or tape measure to check and confirm your OE link length.
4.For best performance and strength;
Wind thread 100% inside turn buckles, then proceed to fine tune.
Note a minimum of 13-14mm is required (REFER FIG 1)
5.Once the length is determined, hand tighten all lock nuts with fingers. (REFER FIG 3)
Note : Studs can point in any direction to suit application.
6.Place the supplied washers over each stud prior to installation. After installing one side check that the other link's studs line up with the sway bar and control arm holes. If you find the studs won't easily slide in then you now have the ability to fine tune the length of the adjustable ball link to remove any unwanted sway bar pre load.
7.Once both links are installed and there are no visible clearance issues, then tighten all lock nuts with appropriate spanners.
8.Check all fittings after test drive and re-check after initial 100km.

FIGURE 1

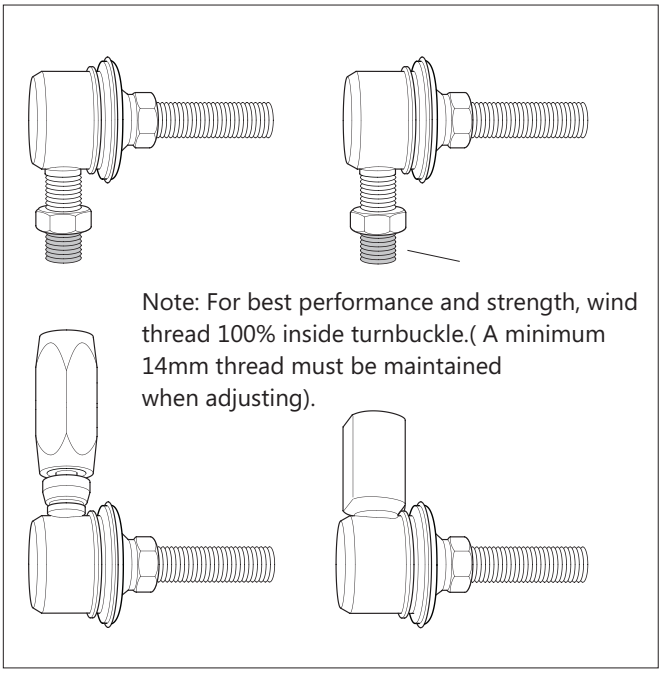

FIGURE 2

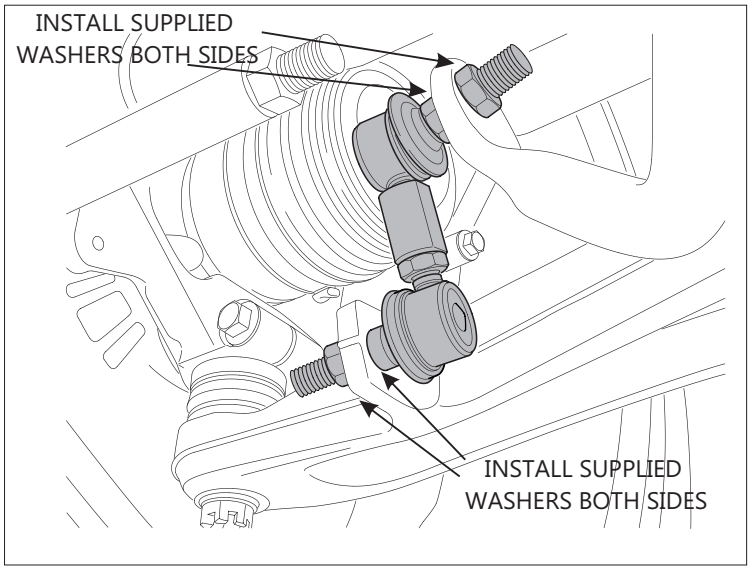

FIGURE 3

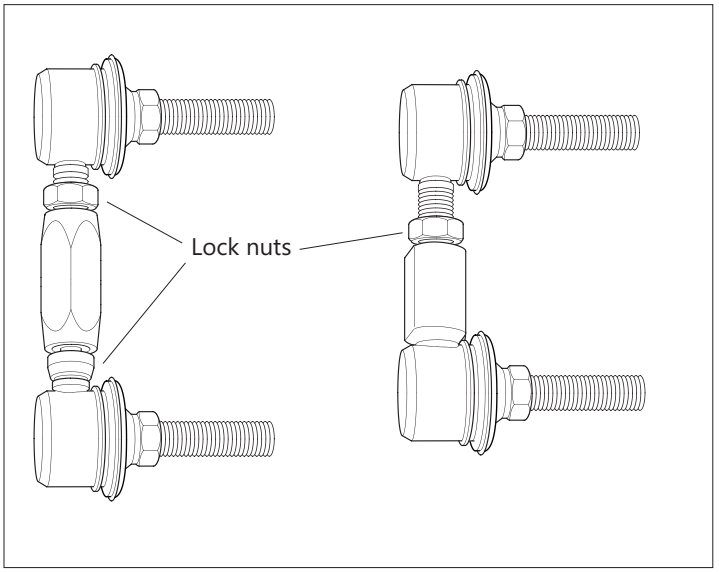

Warning: Please drive carefully after fitting any suspension modifications while you accustom yourself to the vehicles changed behaviour.

Note: It is recommended that a licensed workshop or trades person carry out the above procedure and that the workshop manual be used in conjunction with the above.

Instruction Sheet
Rear Swaybar Kit

Z5205

Suits: Honda Civic FN2 '07 - '10

N.B: This instruction sheet should be used in conjunction with the workshop manual

1.Raise the vehicle evenly and support with jack stands.
2.Place the supplied U bolts over the suspension beam as per fig 2, then grease I.D. of 'D' bush and secure the swaybar loosely as per fig 1 and 2.
3.In fig 2 place 39.5mm O.D. washer over top of lower spring seat, place 10mm capscrew through the washer and secure bracket from underneath using large O.D. washer and nut. Finally secure the bracket with 8mm cap screw making sure handbrake cable bracket is secured under head of bolt as per fig 3.
4.When replacing plastic aero tray it will need to have material removed for a depth of 25mm to fit correctly as shown in fig 4.
5.Tighten all nuts and bolts and set swaybar link to softest setting (see included instruction) before driving vehicle.

FIG.4

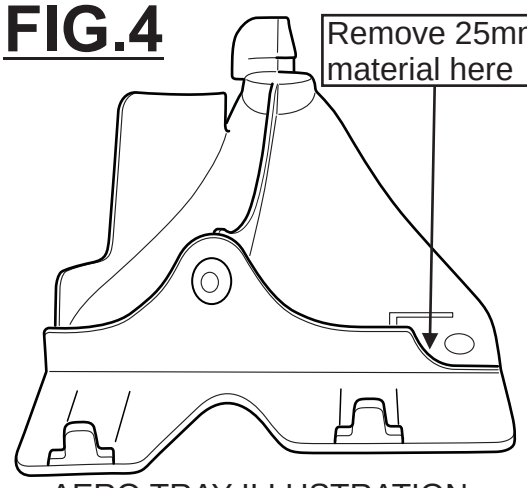

AERO TRAY ILLUSTRATION

FIG.1

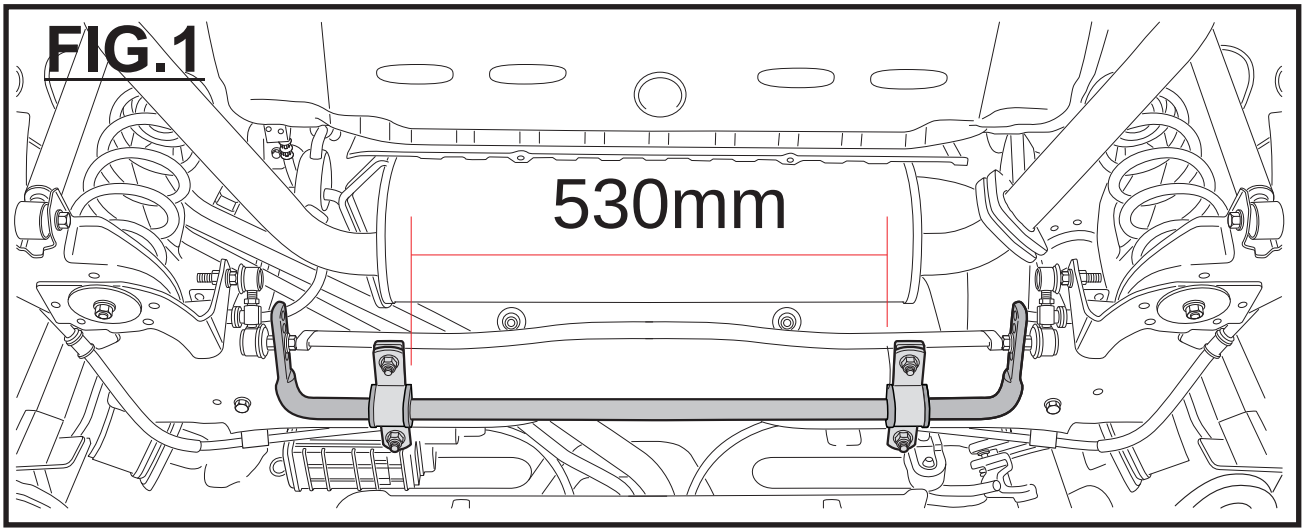

FIG.2

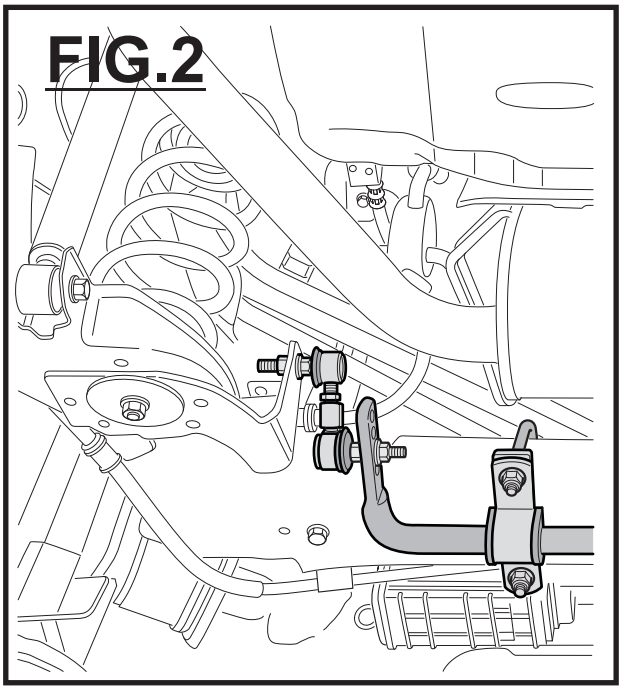

FIG.3

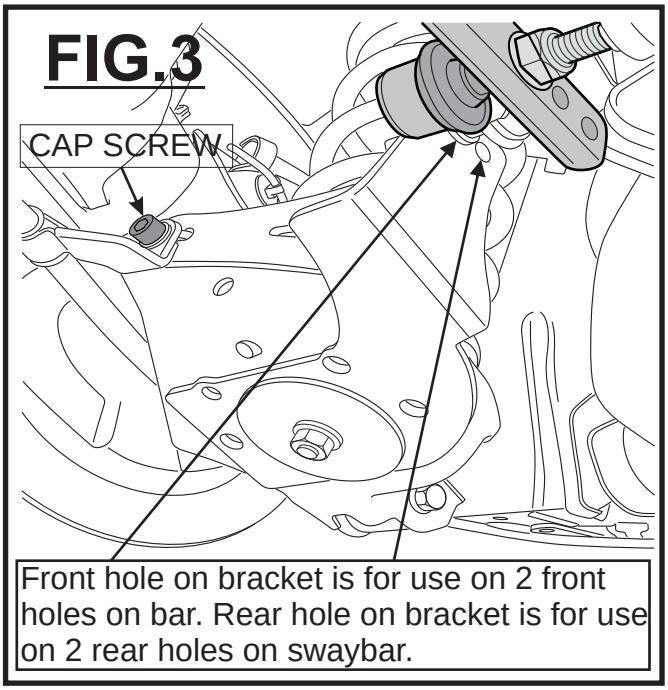

N.B: It is recommended that a licences workshop or tradesperson carry out tha above procedure and that workshop manual and relevant safety procedures are followed in addition to the above.

Copyright ABN 99 124 177 297